EXCAVATION DIMENSIONS

TWIN TANK POLY - MODEL ENP 10-2

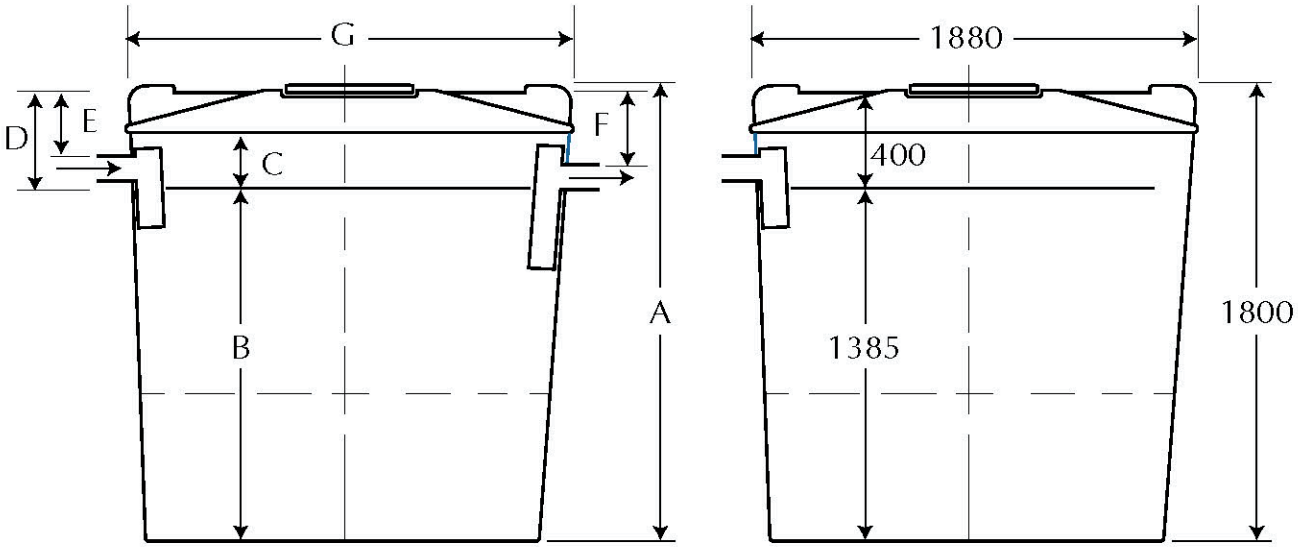

BEDDING SHOULD BE ON A SOLID BASE WITH 50MM GRAVEL OR SAND FOR LEVELING

ALL PIPE WORK MUST BE SECURELY SUPPORTED

EACH ECONOCYCLE TANK	*DIMENSIONS*
TANK CAPACITY	**3000l** *(400mm air space)*
A. Overall tank height	**1800mm**
B. Liquid depth (base to invert of outlet)	**1385mm**
C. Tank rim to invert of outlet	**225mm**
D. Under roof to invert of outlet	**400mm**
E. Maximum cover to inlet pipe	**250mm**
F. Maximum cover to outlet pipe	**300mm**
G. Diameter - Top	**1880mm**
Weight inc. partition (kg) SEPTIC	**132kg**
Weight inc. treatment processor	**210kg**

PLEASE NOTE: Please ensure that a minimum of 50mm of tank plus manhole lids are above ground.